PRELIMINARY ISSUE 11.10.07

Work Order ID 73771

Friday, September 16, 2011 10:32:52 AM

Item ID: D3805-045 **Accept** **Setup Start** **Stop**

Revision ID:

Item Name: Wearplate Assembly Aft, Low Gear

Start Date: 9/15/2011 **Start Qty:** 8.00 **Cust Item ID:**

Required Date: 9/30/2011 **Req'd Qty:** 8.00 **Customer:**

Reference:

Approvals: **Process Plan:** _____ **Date:** _____ **Tooling:** _____ **Date:** _____ **Run Start** **Stop**

QC: _____ **Date:** _____ **SPC (Y/N):** _____ **Date:** _____

Sequence ID/ Work Center ID	Operation Description	Set Up/ Run Hours	Tool ID	Tool #	Plan Code	Accept Qty	Reject Qty	Reject Number	Insp. Stamp
Draw Nbr	**Revision Nbr**								
D3805	~~A~~ B1								
100	11.10.07 ECN 11-640	0.00							
Large Fab	**Memo**	0.00							
Large Fab	1- on D3806-5, fill cut outs with hardcoat welding rod as per dwg D3805 2059 B Hardcoat Welding Rod BATCH#: M116507								
	2-weld D3806-5 to wearplate by positioning holes together as per dwg D3805 304 S.S. Welding Rod BATCH #: M117651								
	3-Transfer drill holes in bar								
110	QC9- Inspect visual per QS1004- Fusion Welds	0.00							
QC	**Memo**	0.00							
Quality Control									

EL / JBC 11-10-4 (x8)

11-10-04 (8)

Dart Aerospace Ltd

W/O:		WORK ORDER CHANGES					
DATE	STEP	PROCEDURE CHANGE	By	Date	Qty	Approval Chief Eng / Prod Mgr	Approval QC Inspector

Part No: _____ **PAR #:** _____ **Fault Category:** _____ **NCR:** Yes No **DQA:** _____ **Date:** _____

Resolution: _____ **Disposition:** _____ **QA: N/C Closed:** _____ **Date:** _____

NCR:		WORK ORDER NON-CONFORMANCE (NCR)						
DATE	STEP	Description of NC Section A	Corrective Action Section B			Verification Section C	Approval Chief Eng	Approval QC Inspector
			Initial Chief Eng	Action Description Chief Eng	Sign & Date			

NOTE: Date & initial all entries

H:\fFORMS\Quality Assurance\approved QA\NCRWO RevE

Work Order ID 73771

Friday, September 16, 2011 10:32:52 AM

Item ID: D3805-045 **Accept** **Setup Start** **Stop**

Revision ID:

Item Name: Wearplate Assembly Aft, Low Gear

Start Date: 9/15/2011 **Start Qty:** 8.00 **Cust Item ID:**

Required Date: 9/30/2011 **Req'd Qty:** 8.00 **Customer:**

Reference:

Approvals: **Process Plan:** _____ **Date:** _____ **Tooling:** _____ **Date:** _____ **Run Start** **Stop**

QC: _____ **Date:** _____ **SPC (Y/N):** _____ **Date:** _____

Sequence ID/ Work Center ID	Operation Description	Set Up/ Run Hours	Tool ID	Tool #	Plan Code	Accept Qty	Reject Qty	Reject Number	Insp. Stamp
120	QC5- Inspect part completeness to step on W/O	0.00							
QC	Memo	0.00				8			
Quality Control									
130	Grey Sandtex(Ref:4.3.5.6) per QSI005 4.3	0.00							
Powdercoat	Memo	0.00							
Powder Coating	START TIME: 1:00 OVEN TEMPERATURE: 320 °F FINISH TIME: 1:30								
140	QC3- Inspect Part Finish	0.00							
QC	Memo	0.00							
Quality Control									

M118484

8 BK 11-10-5

Dart Aerospace Ltd

W/O:		WORK ORDER CHANGES					
DATE	STEP	PROCEDURE CHANGE	By	Date	Qty	Approval Chief Eng / Prod Mgr	Approval QC Inspector

Part No: _____ **PAR #:** _____ **Fault Category:** _____ **NCR:** Yes No **DQA:** _____ **Date:** _____

Resolution: _____ **Disposition:** _____ **QA: N/C Closed:** _____ **Date:** _____

NCR:		WORK ORDER NON-CONFORMANCE (NCR)						
DATE	STEP	Description of NC Section A	Corrective Action Section B			Verification Section C	Approval Chief Eng	Approval QC Inspector
			Initial Chief Eng	Action Description Chief Eng	Sign & Date			

NOTE: Date & initial all entries

H:\fFORMS\Quality Assurance\approved QA\NCRWO RevE

Work Order ID 73771

Friday, September 16, 2011 10:32:52 AM

Item ID: D3805-045 **Accept** **Setup Start** **Stop**

Revision ID:

Item Name: Wearplate Assembly Aft, Low Gear

Start Date: 9/15/2011 **Start Qty:** 8.00 **Cust Item ID:**

Required Date: 9/30/2011 **Req'd Qty:** 8.00 **Customer:**

Reference:

Approvals: **Process Plan:** _____ **Date:** _____ **Tooling:** _____ **Date:** _____ **Run Start** **Stop**

QC: _____ **Date:** _____ **SPC (Y/N):** _____ **Date:** _____

Sequence ID/ Work Center ID	Operation Description	Set Up/ Run Hours	Tool ID	Tool #	Plan Code	Accept Qty	Reject Qty	Reject Number	Insp. Stamp
150		0.00							
Small Fab	**Memo**	0.00							
Small Fab	1- Bond D3807-5 gasket to inner surface of wearplate using a thin layer of 3m 1300/1300L scotch grip adhesive as per dwg BATCH: H115 230					11/10/06			8
160	QC5- Inspect part completeness to step on W/O	0.00 to PBI Dwg only							
QC	**Memo**	0.00 Sul10/07				RE			
Quality Control									
170	Identify as per dwg & Stock Location: FP-1	0.00							
Packaging	**Memo**	0.00							
Packaging						YS		11/10/06	

counted measured

Dart Aerospace Ltd

W/O:		WORK ORDER CHANGES					
DATE	STEP	PROCEDURE CHANGE	By	Date	Qty	Approval Chief Eng / Prod Mgr	Approval QC Inspector

Part No: _____ **PAR #:** _____ **Fault Category:** _____ **NCR:** Yes No **DQA:** _____ **Date:** _____

Resolution: _____ **Disposition:** _____ **QA: N/C Closed:** _____ **Date:** _____

NCR:		WORK ORDER NON-CONFORMANCE (NCR)						
DATE	STEP	Description of NC Section A	Corrective Action Section B			Verification Section C	Approval Chief Eng	Approval QC Inspector
			Initial Chief Eng	Action Description Chief Eng	Sign & Date			

NOTE: Date & initial all entries

H:\fFORMS\Quality Assurance\approved QA\NCRWO RevE

Work Order ID 73771

Friday, September 16, 2011 10:32:52 AM

Item ID: D3805-045 **Accept** **Setup Start** **Stop**

Revision ID:

Item Name: Wearplate Assembly Aft, Low Gear

Start Date: 9/15/2011 **Start Qty:** 8.00 **Cust Item ID:**

Required Date: 9/30/2011 **Req'd Qty:** 8.00 **Customer:**

Reference:

Run Start **Stop**

Approvals: **Process Plan:** _____ **Date:** _____ **Tooling:** _____ **Date:** _____

QC: _____ **Date:** _____ **SPC (Y/N):** _____ **Date:** _____

Sequence ID/ Work Center ID	Operation Description	Set Up/ Run Hours	Tool ID	Tool #	Plan Code	Accept Qty	Reject Qty	Reject Number	Insp. Stamp
180	QC21- Final Inspection - Work Order Release	0.00					11/10/11		
QC Quality Control	**Memo**	0.00							

MF 11-10-07

POSITIVE RECALL
EFFECTIVE 11/9/11 AUTH
RELEASED 11/10/07 DATE

Dart Aerospace Ltd

W/O:		WORK ORDER CHANGES					
DATE	STEP	PROCEDURE CHANGE	By	Date	Qty	Approval Chief Eng / Prod Mgr	Approval QC Inspector

Part No: _____ **PAR #:** _____ **Fault Category:** _____ **NCR:** Yes No **DQA:** _____ **Date:** _____

Resolution: _____ **Disposition:** _____ **QA: N/C Closed:** _____ **Date:** _____

NCR:		WORK ORDER NON-CONFORMANCE (NCR)						
DATE	STEP	Description of NC Section A	Corrective Action Section B			Verification Section C	Approval Chief Eng	Approval QC Inspector
			Initial Chief Eng	Action Description Chief Eng	Sign & Date			

NOTE: Date & initial all entries

H:\fFORMS\Quality Assurance\approved QA\NCRWO RevE

Picklist Print

Friday, September 16, 2011 10:32:50 AM

Work Order ID: 73771

Parent Item: D3805-045

Parent Item Name: Wearplate Assembly Aft, Low Gear

Start Date: 9/15/2011 **Required Date:** 9/30/2011

Start Qty: 8.00 **Required Qty:** 8.00

Comments: IPP Rev:A 08-12-01 new issue EC verified by:DD IPP Rev:B 09-03-04 rev.a as per dwg DD verified by:EC

Component Item ID/ Item Name	Replacement Item ID	Mfg/ Purch	Bin Item	Primary Location	Last Location	Route Seq ID	Unit of Measure	Qty on Hand	Qty per Kit	Total Qty	Qty Issued	Date Issued	Status
D3805-5 Plate		Manufactured	No	B74049 x8		100	Each	0.0000	1	8	11/09/28 JDL		
D3806-5 Bar		Manufactured	No			100	Each	2.0000	1	8			
	74126 X5			Location: WA030			Loc Qty: 2				11/09/28 JDL		
	74054 x3				46781		2						
D3807-5 Gasket		Manufactured	No	B74057		150	Each	0.0000	1	8	SB 11/10/06		

Dart Aerospace Ltd

W/O:		WORK ORDER CHANGES					
DATE	STEP	PROCEDURE CHANGE	By	Date	Qty	Approval Chief Eng / Prod Mgr	Approval QC Inspector

Part No: _____ **PAR #:** _____ **Fault Category:** _____ **NCR:** Yes No **DQA:** _____ **Date:** _____

Resolution: _____ **Disposition:** _____ **QA: N/C Closed:** _____ **Date:** _____

NCR:		WORK ORDER NON-CONFORMANCE (NCR)						
DATE	STEP	Description of NC Section A	Corrective Action Section B			Verification Section C	Approval Chief Eng	Approval QC Inspector
			Initial Chief Eng	Action Description Chief Eng	Sign & Date			

NOTE: Date & initial all entries

H:\fFORMS\Quality Assurance\approved QA\NCRWO RevE

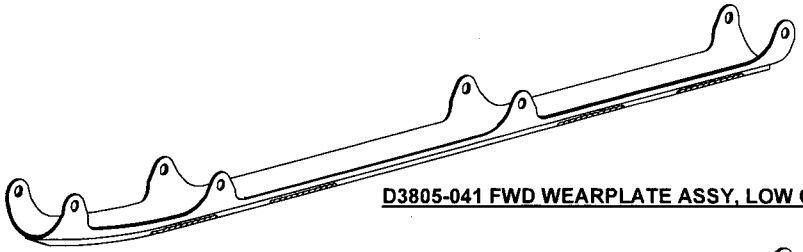

D3805-041 FWD WEARPLATE ASSY, LOW GEAR

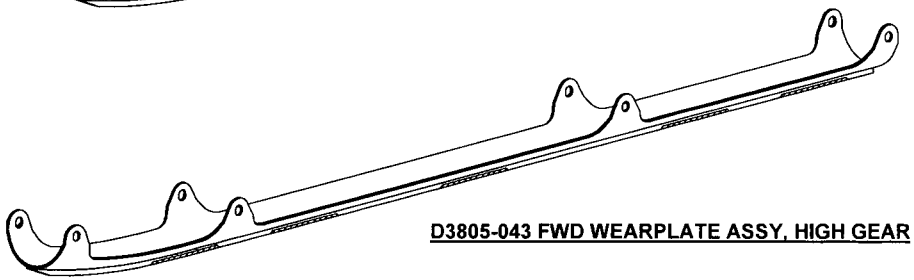

D3805-043 FWD WEARPLATE ASSY, HIGH GEAR

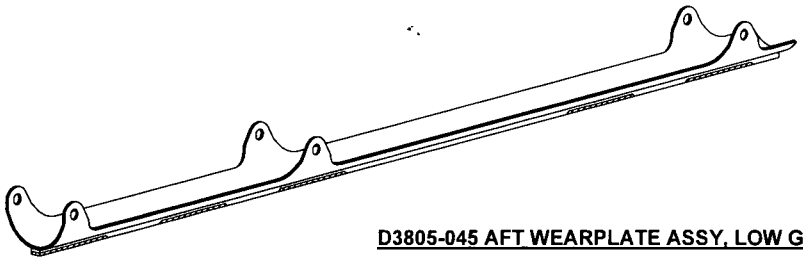

D3805-045 AFT WEARPLATE ASSY, LOW GEAR

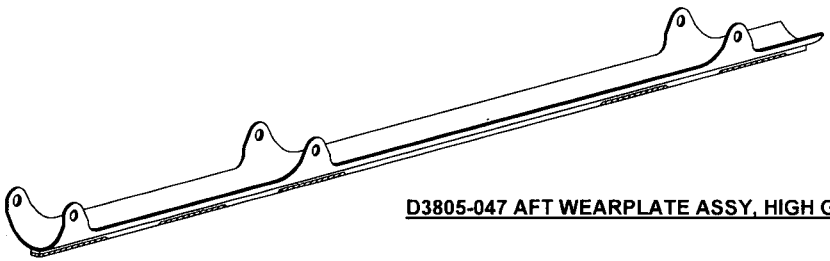

D3805-047 AFT WEARPLATE ASSY, HIGH GEAR

ITEM	QTY -041	QTY -043	QTY -045	QTY -047	P/N	DESCRIPTION
1	X				D3805-041	FWD WEARPLATE ASSY, LOW GEAR
2		X			D3805-043	FWD WEARPLATE ASSY, HIGH GEAR
3			X		D3805-045	AFT WEARPLATE ASSY, LOW GEAR
4				X	D3805-047	AFT WEARPLATE ASSY, HIGH GEAR
11	1				D3805-1	PLATE
12		1			D3805-3	PLATE
13			1		D3805-5	PLATE
14				1	D3805-7	PLATE
15	1				D3806-1	BAR
16		1			D3806-3	BAR
17			1		D3806-5	BAR
18				1	D3806-7	BAR
19	1				D3807-1	GASKET
20		1			D3807-3	GASKET
21			1		D3807-5	GASKET
22				1	D3807-7	GASKET
31	A/R	A/R	A/R	A/R	2059B	HARDCOAT
32	A/R	A/R	A/R	A/R	1300 (OR 1300L)	3M SCOTCH-GRIP ADHESIVE

PRELIMINARY ISSUE

11.09.16

a/b73771

REV.	DESCRIPTION	BY	DATE
PB1	REVISED D3805-1F/-3F TO EASE MANUFACTURABILITY (ADDED CUTOUT AT FWD END OF PLATE PER PAR11-106)	MB	11.09.16
A	NEW ISSUE	MB	08.11.21

DESIGN	gp	**DART AEROSPACE USA, INC.** PORT HADLOCK, WA	
DRAWN			
CHECKED		DRAWING NO. D3805	REV. PB1
MFG. APPR.			SHEET 1 OF 8
APPROVED		TITLE WEARPLATE ASSY	SCALE NTS
DE APPR.			
DATE	11.09.16		

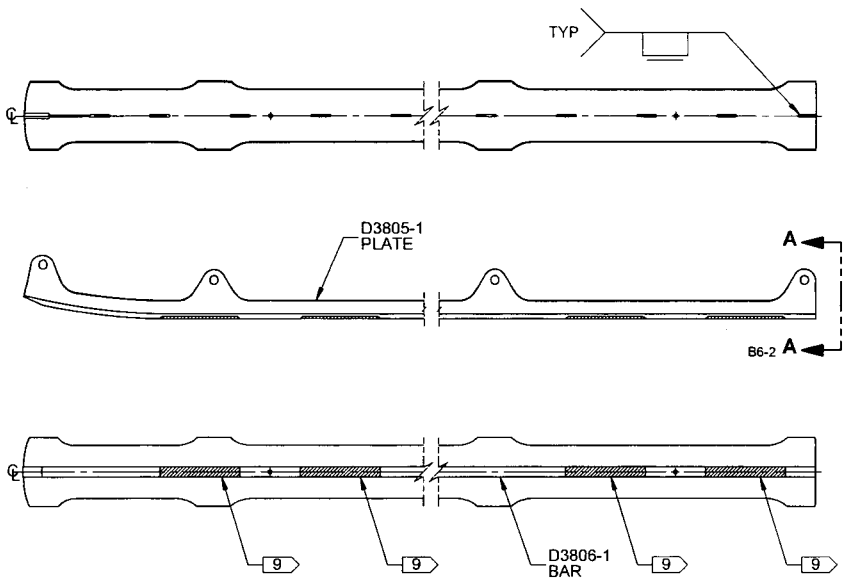

D3805-041 FWD WEARPLATE ASSY, LOW GEAR

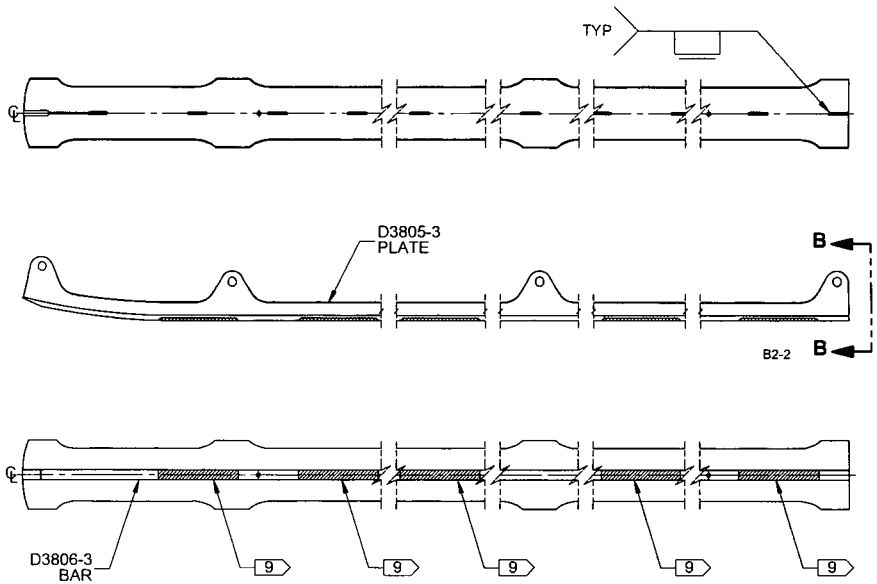

D3805-043 FWD WEARPLATE ASSY, HIGH GEAR

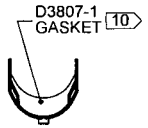

VIEW A-A C5-2

PRELIMINARY ISSUE
11.09.16

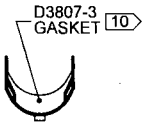

VIEW B-B C1-2

NOTES:
1) MATERIAL: N/A
2) FINISH: POWDER COAT "GREY SANDTEX" (4.3.5.6) PER DART QSI 005 4.3
3) TOLERANCES: PER DART QSI 018 UNLESS OTHERWISE NOTED
4) UNITS: INCHES UNLESS OTHERWISE NOTED
5) BREAK SHARP EDGES: N/A
6) IDENTIFICATION: IDENTIFY WITH DART P/N "D3805-04X" USING FINE POINT PERMANENT INK MARKER
7) WEIGHT: D3805-041 = 4.18 lbs; D3805-043 = 4.45 lbs
8) WELDING: PER QSI 004
9) 2059B HARDCOAT WELD, 0.19 THICK X 0.50 WIDE, FLUSH WITH D3806-X BAR ON ALL 3 SURFACES
10) AFTER FINISH, BOND D3807-X GASKET TO INNER SURFACE OF WEARPLATE USING A THIN LAYER OF 3M 1300/1300L SCOTCH GRIP ADHESIVE

DESIGN	gp	**DART AEROSPACE USA, INC.** PORT HADLOCK, WA
DRAWN		
CHECKED		DRAWING NO. D3805 — REV. PB1 — SHEET 2 OF 8
MFG. APPR.		
APPROVED		TITLE: WEARPLATE ASSY — SCALE: NTS
DE APPR.		
DATE	11.09.16	

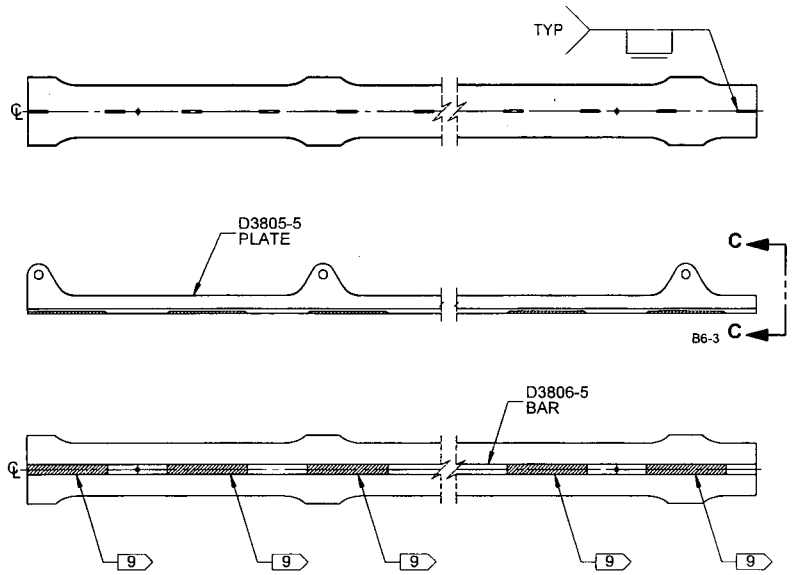

D3805-045 AFT WEARPLATE ASSY,

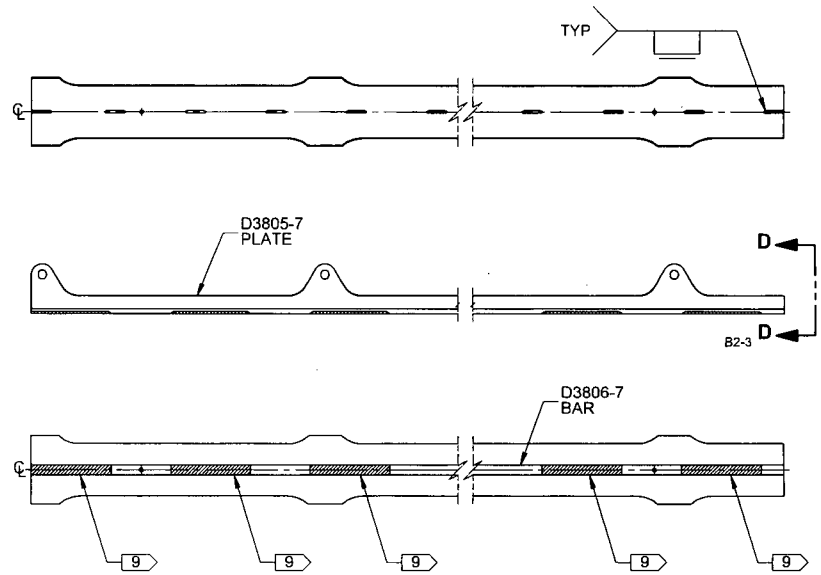

D3805-047 AFT WEARPLATE ASSY,

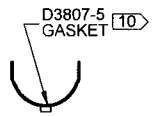

VIEW C-C C5-3

PRELIMINARY ISSUE

11.09.16

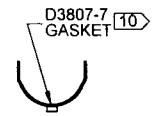

VIEW D-D C1-3

NOTES:
1) MATERIAL: N/A
2) FINISH: POWDER COAT "GREY SANDTEX" (4.3.5.6) PER DART QSI 005 4.3
3) TOLERANCES: PER DART QSI 018 UNLESS OTHERWISE NOTED
4) UNITS: INCHES UNLESS OTHERWISE NOTED
5) BREAK SHARP EDGES: N/A
6) IDENTIFICATION: IDENTIFY WITH DART P/N "D3805-04X" USING FINE POINT PERMANENT INK MARKER
7) WEIGHT: D3805-045 = 4.24 lbs; D3805-047 = 4.21 lbs
8) WELDING: PER QSI 004
9) 2059B HARDCOAT WELD, 0.19 THICK X 0.50 WIDE, FLUSH WITH D3806-X BAR ON ALL 3 SURFACES
10) AFTER FINISH, BOND D3807-X GASKET TO INNER SURFACE OF WEARPLATE USING A THIN LAYER OF 3M 1300/1300L SCOTCH GRIP ADHESIVE

DESIGN	GP	**DART AEROSPACE USA, INC.** PORT HADLOCK, WA
DRAWN		
CHECKED		DRAWING NO. D3805 — REV. PB1 — SHEET 3 OF 8
MFG. APPR.		
APPROVED		TITLE: WEARPLATE ASSY — SCALE: NTS
DE APPR.		
DATE	11.09.16	

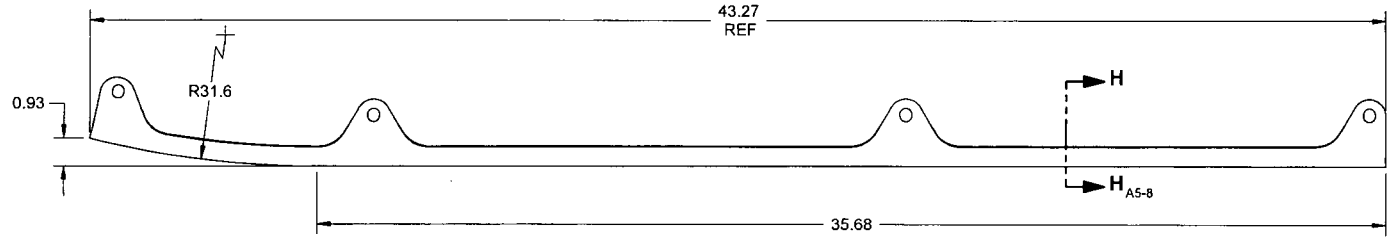

D3805-1 PLATE
(MAKE FROM D3805-1F)

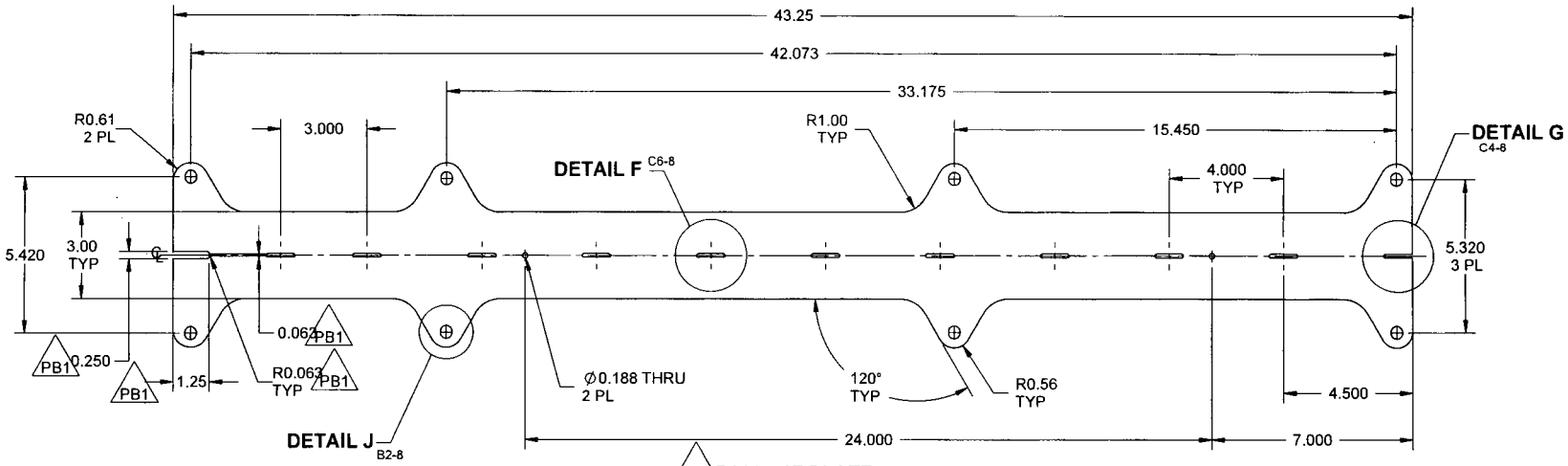

PB1 **D3805-1F PLATE**

PRELIMINARY ISSUE
11.09.16

NOTES:
1) MATERIAL: AISI 304/316 STAINLESS STEEL SHEET PER AMS 5513 OR 5524
18 GAUGE (0.050 THICK)
REF. DART SPEC. M304S18GA
2) FINISH: NONE
3) TOLERANCES: PER DART QSI 018 UNLESS OTHERWISE NOTED
4) UNITS: INCHES UNLESS OTHERWISE NOTED
5) BREAK SHARP EDGES: 0.005 TO 0.010 MAX
6) IDENTIFICATION: N/A
7) WEIGHT: 2.11 lbs

DESIGN	gp	**DART AEROSPACE USA, INC.** PORT HADLOCK, WA
DRAWN		
CHECKED		DRAWING NO. D3805 — REV. PB1 — SHEET 4 OF 8
MFG. APPR.		
APPROVED		TITLE: WEARPLATE ASSY — SCALE: NTS
DE APPR.		
DATE	11.09.16	

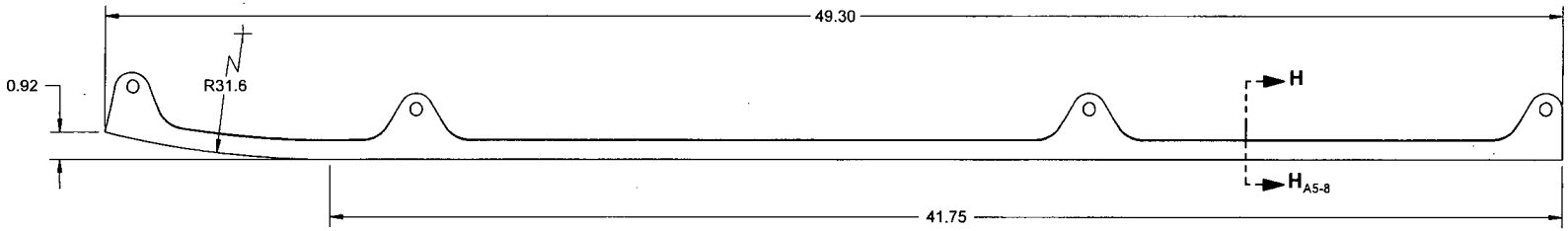

D3805-3 PLATE
(MAKE FROM D3805-3F)

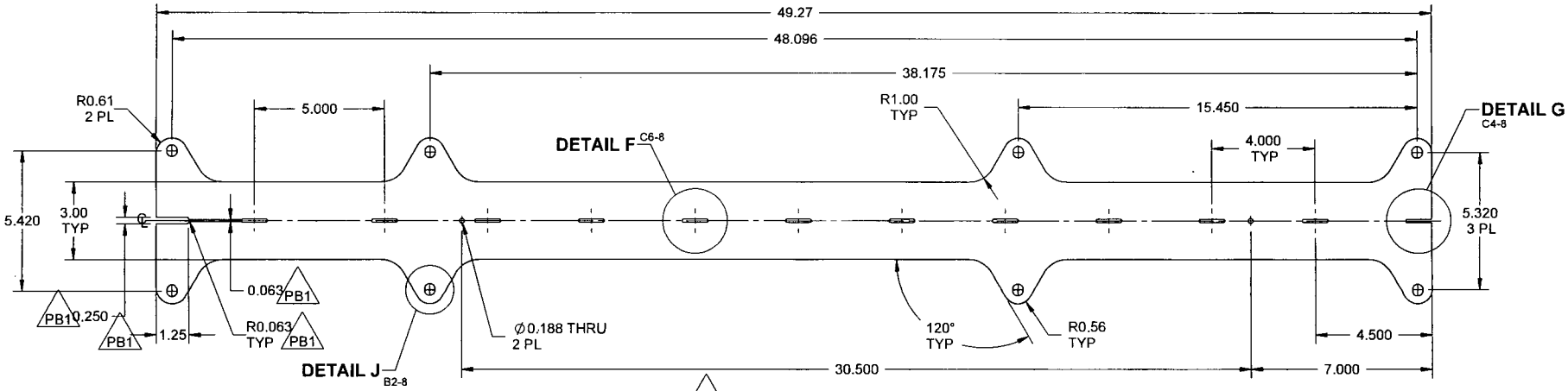

PB1 **D3805-3F PLATE**

NOTES:
1) MATERIAL: AISI 304/316 STAINLESS STEEL SHEET PER AMS 5513 OR 5524
18 GAUGE (0.050 THICK)
REF. DART SPEC. M304S18GA
2) FINISH: NONE
3) TOLERANCES: PER DART QSI 018 UNLESS OTHERWISE NOTED
4) UNITS: INCHES UNLESS OTHERWISE NOTED
5) BREAK SHARP EDGES: 0.005 TO 0.010 MAX
6) IDENTIFICATION: N/A
7) WEIGHT: 2.36 lbs

PRELIMINARY ISSUE
11.09.16

DESIGN	GP	**DART AEROSPACE USA, INC.** PORT HADLOCK, WA
DRAWN		
CHECKED		DRAWING NO. D3805 — REV. PB1 — SHEET 5 OF 8
MFG. APPR.		
APPROVED		TITLE: WEARPLATE ASSY — SCALE: NTS
DE APPR.		
DATE	11.09.16	

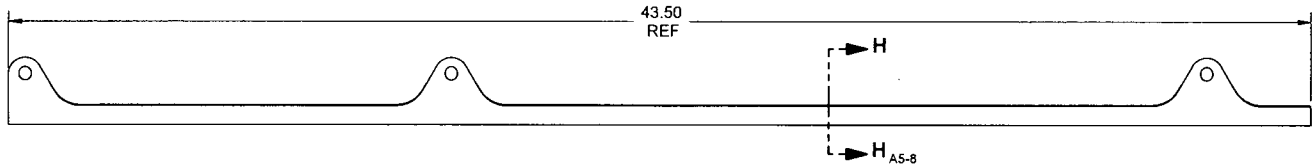

D3805-5 PLATE
(MAKE FROM D3805-5F)

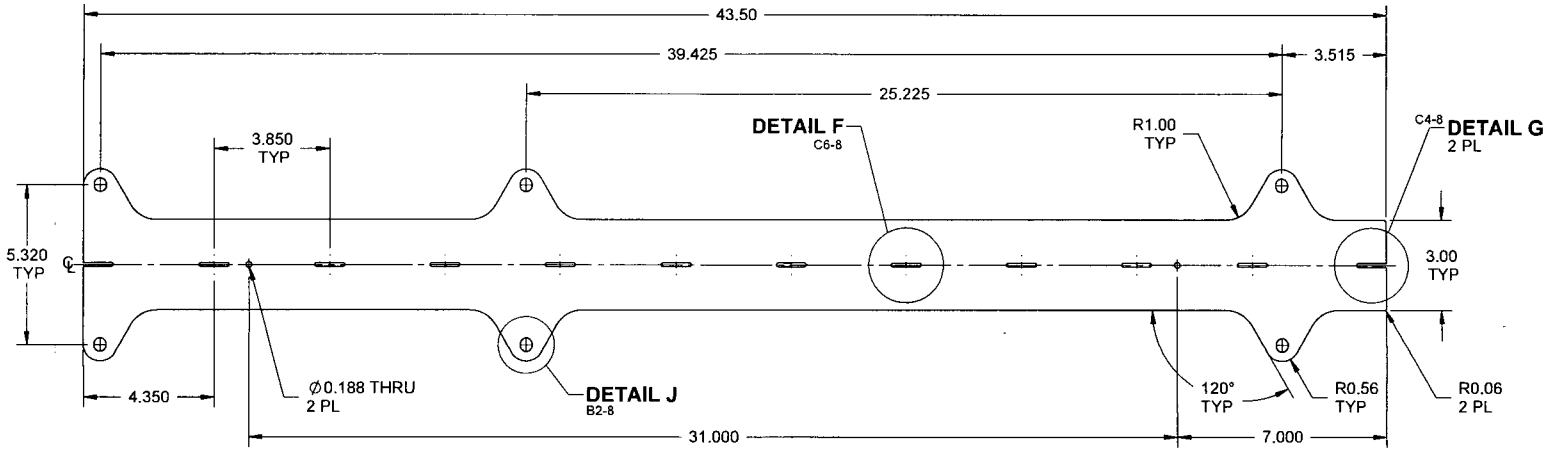

D3805-5F PLATE

NOTES:
1) MATERIAL: AISI 304/316 STAINLESS STEEL SHEET PER AMS 5513 OR 5524
18 GAUGE (0.050 THICK)
REF. DART SPEC. M304S18GA
2) FINISH: NONE
3) TOLERANCES: PER DART QSI 018 UNLESS OTHERWISE NOTED
4) UNITS: INCHES UNLESS OTHERWISE NOTED
5) BREAK SHARP EDGES: 0.005 TO 0.010 MAX
6) IDENTIFICATION: N/A
7) WEIGHT: 2.06 lbs

PRELIMINARY ISSUE
11.09.16

DESIGN	GP	DART AEROSPACE USA, INC. PORT HADLOCK, WA
DRAWN		
CHECKED		DRAWING NO. D3805 — REV. PB1 — SHEET 6 OF 8
MFG. APPR.		
APPROVED		TITLE WEARPLATE ASSY — SCALE NTS
DE APPR.		
DATE	11.09.16	

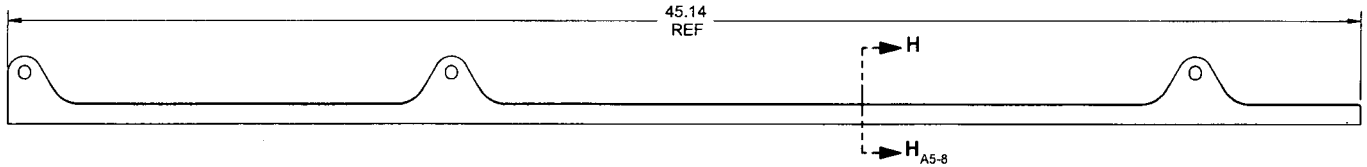

D3805-7 PLATE
(MAKE FROM D3805-7F)

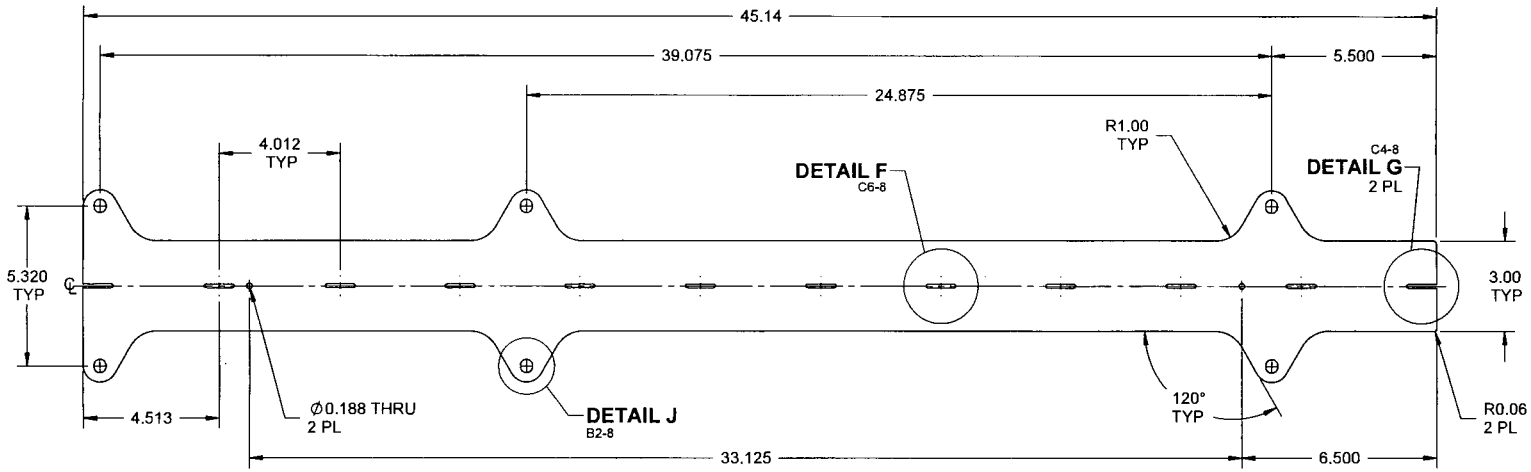

D3805-7F PLATE

NOTES:
1) MATERIAL: AISI 304/316 STAINLESS STEEL SHEET PER AMS 5513 OR 5524
18 GAUGE (0.050 THICK)
REF. DART SPEC. M304S18GA
2) FINISH: NONE
3) TOLERANCES: PER DART QSI 018 UNLESS OTHERWISE NOTED
4) UNITS: INCHES UNLESS OTHERWISE NOTED
5) BREAK SHARP EDGES: 0.005 TO 0.010 MAX
6) IDENTIFICATION: N/A
7) WEIGHT: 2.13 lbs

PRELIMINARY ISSUE
11.09.16

DESIGN		DART AEROSPACE USA, INC. PORT HADLOCK, WA
DRAWN		
CHECKED		DRAWING NO. D3805 — REV. PB1 — SHEET 7 OF 8
MFG. APPR.		
APPROVED		TITLE: WEARPLATE ASSY — SCALE: NTS
DE APPR.		
DATE	11.09.16	

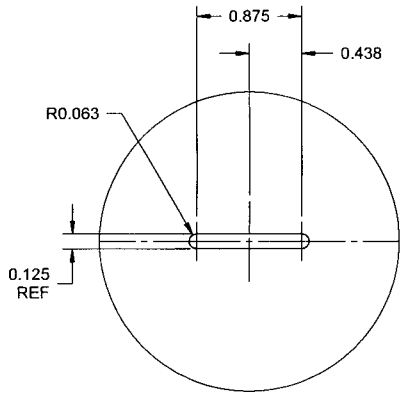

DETAIL F C5-4 C5-5 C4-6 C4-7
SLOT DETAIL TYP
SCALE 4X

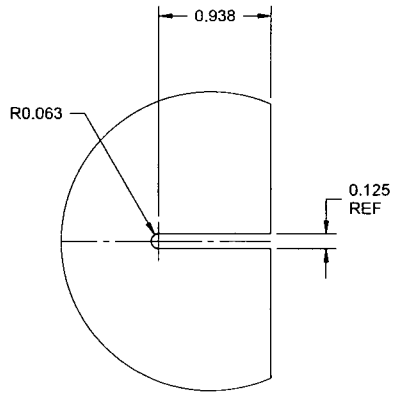

DETAIL G C1-4 C1-5 C1-6 C2-7
SLOT DETAIL TYP
SCALE 4X

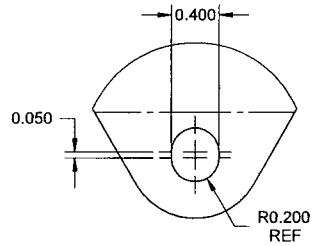

DETAIL J B6-4 B7-5 B5-6 B5-7
SCALE 4X

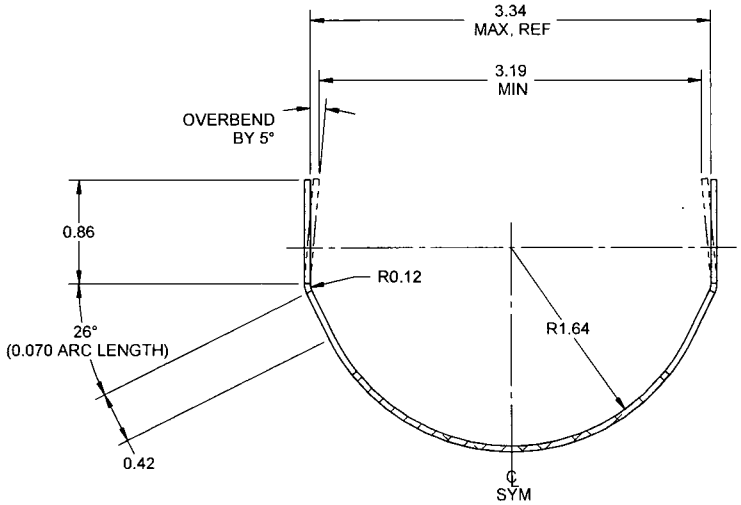

SECTION H-H D3-4 D3-5 D3-6 D3-7
SCALE 4X

PRELIMINARY ISSUE
11.09.16

DESIGN	GP	**DART AEROSPACE USA, INC.** PORT HADLOCK, WA
DRAWN		
CHECKED		DRAWING NO. D3805 — REV. PB1 — SHEET 8 OF 8
MFG. APPR.		
APPROVED		TITLE WEARPLATE ASSY — SCALE NTS
DE APPR.		
DATE	11.09.16	

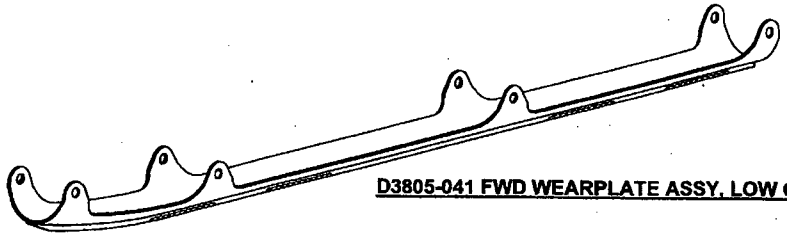

D3805-041 FWD WEARPLATE ASSY, LOW GEAR

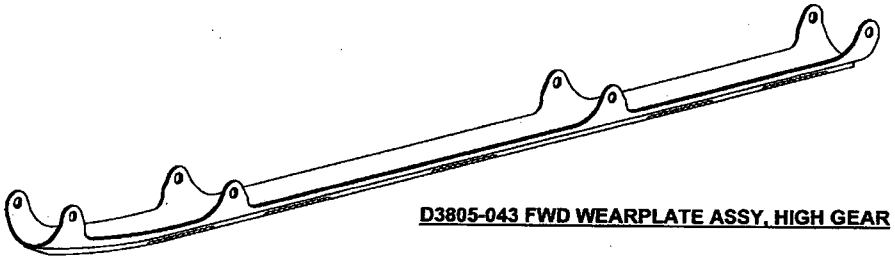

D3805-043 FWD WEARPLATE ASSY, HIGH GEAR

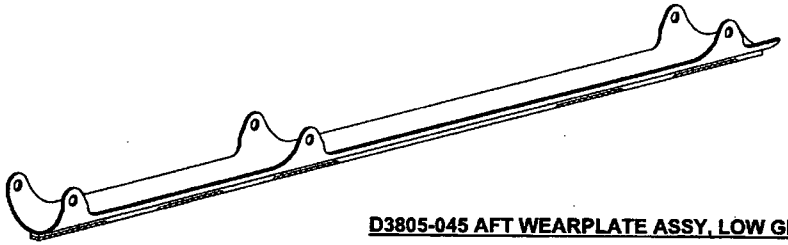

D3805-045 AFT WEARPLATE ASSY, LOW GEAR

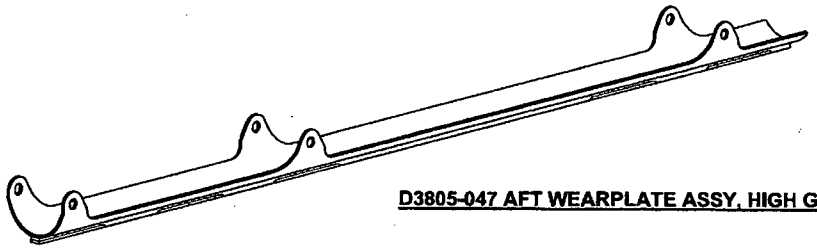

D3805-047 AFT WEARPLATE ASSY, HIGH GEAR

ITEM	QTY -041	QTY -043	QTY -045	QTY -047	P/N	DESCRIPTION
1	X				D3805-041	FWD WEARPLATE ASSY, LOW GEAR
2		X			D3805-043	FWD WEARPLATE ASSY, HIGH GEAR
3			X		D3805-045	AFT WEARPLATE ASSY, LOW GEAR
4				X	D3805-047	AFT WEARPLATE ASSY, HIGH GEAR
11	1				D3805-1	PLATE
12		1			D3805-3	PLATE
13			1		D3805-5	PLATE
14				1	D3805-7	PLATE
15	1				D3806-1	BAR
16		1			D3806-3	BAR
17			1		D3806-5	BAR
18				1	D3806-7	BAR
19	1				D3807-1	GASKET
20		1			D3807-3	GASKET
21			1		D3807-5	GASKET
22				1	D3807-7	GASKET
31	A/R	A/R	A/R	A/R	2059B	HARDCOAT
32	A/R	A/R	A/R	A/R	1300 (OR 1300L)	3M SCOTCH-GRIP ADHESIVE

RELEASED
2011-10-03

REV.	DESCRIPTION	BY	DATE
B	REVISED D3805-1F/-3F TO EASE MANUFACTURABILITY (ADDED CUTOUT AT FWD END OF PLATE PER PAR11-108) AND RE-ORGANIZED NOTES SHEETS 2 & 3	MB	11.09.16
A	NEW ISSUE	MB	08.11.21

DESIGN		DART AEROSPACE USA, INC. KENT, WA	
DRAWN			
CHECKED		DRAWING NO. D3805	REV. B SHEET 1 OF 8
MFG. APPR.			
APPROVED		TITLE WEARPLATE ASSY	SCALE NTS
DE APPR.			
DATE	11.09.16		

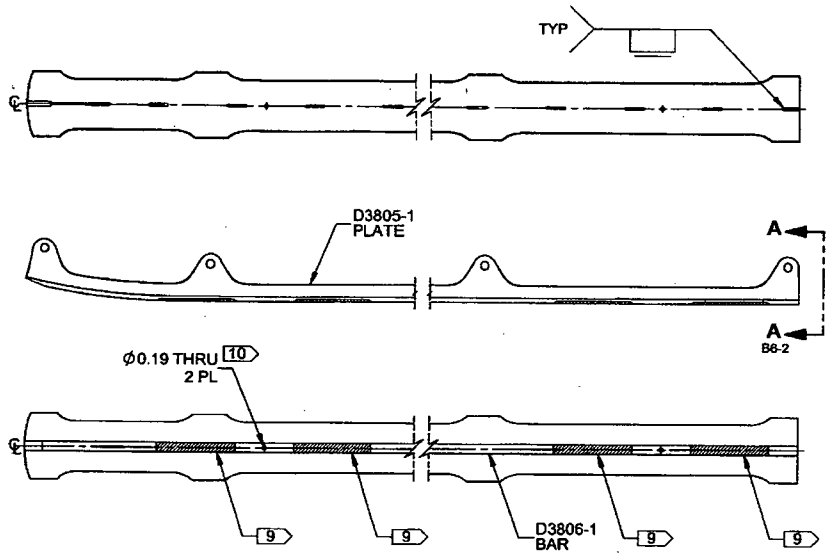

D3805-041 FWD WEARPLATE ASSY, LOW GEAR

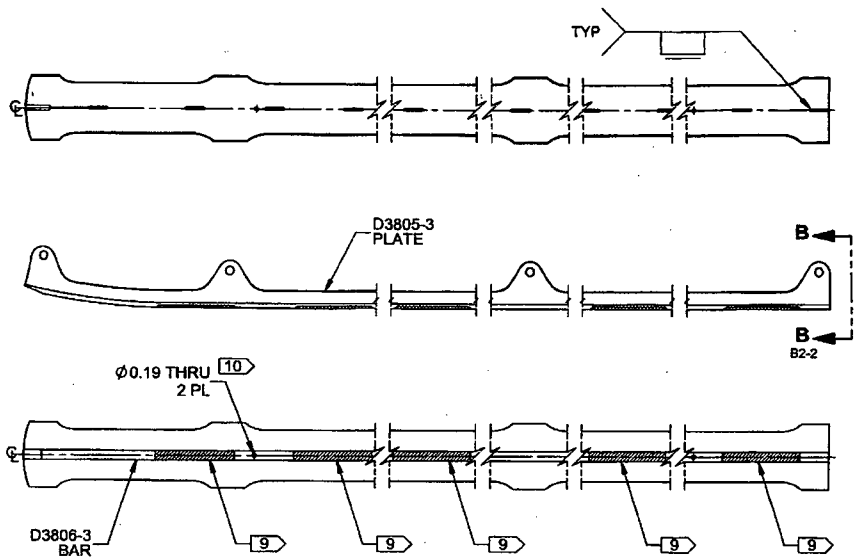

D3805-043 FWD WEARPLATE ASSY, HIGH GEAR

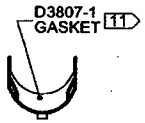

VIEW A-A C5-2

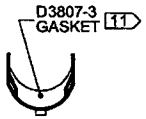

VIEW B-B C1-2

RELEASED
2011-10-03

NOTES: B
1) MATERIAL: N/A
2) FINISH: POWDER COAT "GREY SANDTEX" (4.3.5.6) PER DART QSI 005 4.3
3) TOLERANCES: PER DART QSI 018 UNLESS OTHERWISE NOTED
4) UNITS: INCHES UNLESS OTHERWISE NOTED
5) BREAK SHARP EDGES: N/A
6) IDENTIFICATION: IDENTIFY WITH DART P/N "D3805-04X" USING FINE POINT PERMANENT INK MARKER
7) WEIGHT: D3805-041 = 4.18 lbs; D3805-043 = 4.78 lbs
8) WELDING: PER QSI 004
9) 2059B HARDCOAT WELD, 0.19 THICK X 0.50 WIDE, FLUSH WITH D3806-X BAR ON ALL 3 SURFACES
10) AFTER WELDING, TRANSFER DRILL THRU BAR FROM PLATE
11) AFTER FINISH, BOND D3807-X GASKET TO INNER SURFACE OF WEARPLATE USING A THIN LAYER OF 3M 1300/1300L SCOTCH GRIP ADHESIVE

DESIGN		DART AEROSPACE USA, INC. KENT, WA
DRAWN		
CHECKED		DRAWING NO. D3805 — REV. B — SHEET 2 OF 8
MFG. APPR.		
APPROVED		TITLE: WEARPLATE ASSY — SCALE: NTS
DE APPR.		
DATE	11.09.16	

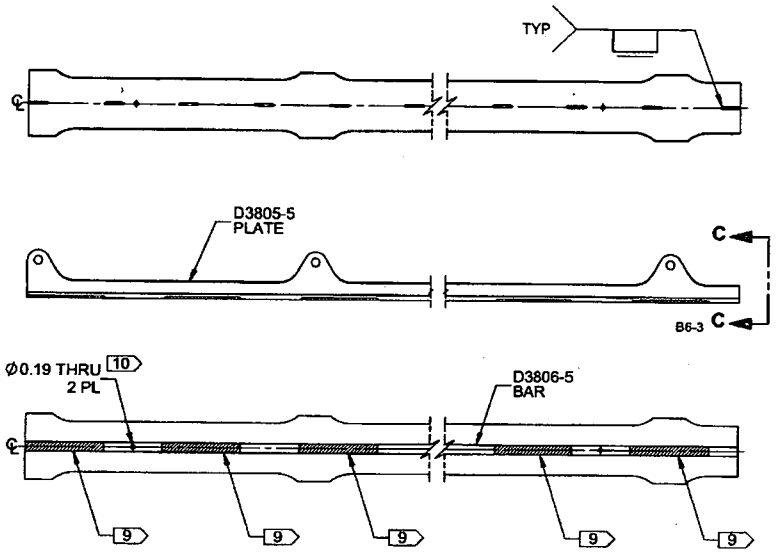

D3805-045 AFT WEARPLATE ASSY.

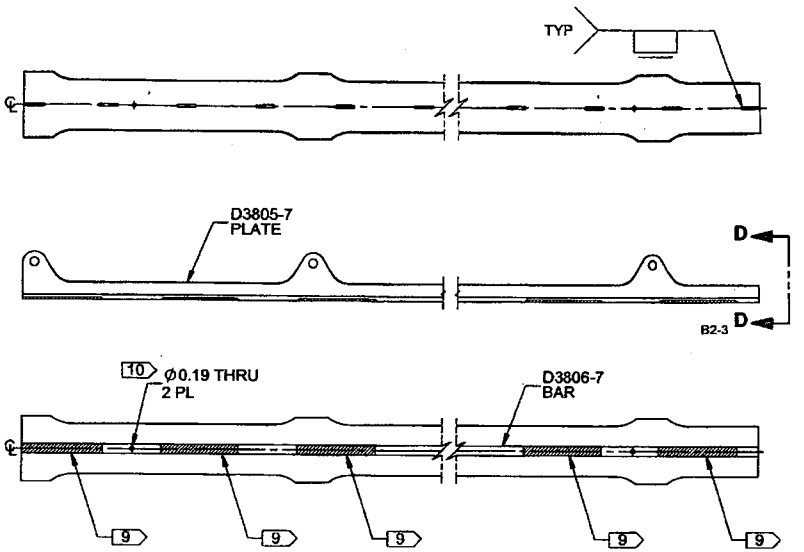

D3805-047 AFT WEARPLATE ASSY.

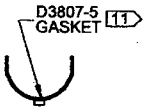

VIEW C-C C5-3

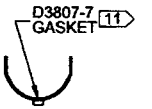

VIEW D-D C1-3

RELEASED
2011-10-03

NOTES: B
1) MATERIAL: N/A
2) FINISH: POWDER COAT "GREY SANDTEX" (4.3.5.6) PER DART QSI 005 4.3
3) TOLERANCES: PER DART QSI 018 UNLESS OTHERWISE NOTED
4) UNITS: INCHES UNLESS OTHERWISE NOTED
5) BREAK SHARP EDGES: N/A
6) IDENTIFICATION: IDENTIFY WITH DART P/N "D3805-04X" USING FINE POINT PERMANENT INK MARKER
7) WEIGHT: D3805-045 = 4.24 lbs; D3805-047 = 4.53 lbs
8) WELDING: PER QSI 004
9) 2059B HARDCOAT WELD, 0.19 THICK X 0.50 WIDE, FLUSH WITH D3806-X BAR ON ALL 3 SURFACES
10) AFTER WELDING, TRANSFER DRILL THRU BAR FROM PLATE
11) AFTER FINISH, BOND D3807-X GASKET TO INNER SURFACE OF WEARPLATE USING A THIN LAYER OF 3M 1300/1300L SCOTCH GRIP ADHESIVE

DESIGN		DART AEROSPACE USA, INC. KENT, WA
DRAWN		
CHECKED		DRAWING NO. D3805 — REV. B — SHEET 3 OF 8
MFG. APPR.		
APPROVED		TITLE WEARPLATE ASSY — SCALE NTS
DE APPR.		
DATE	11.09.16	

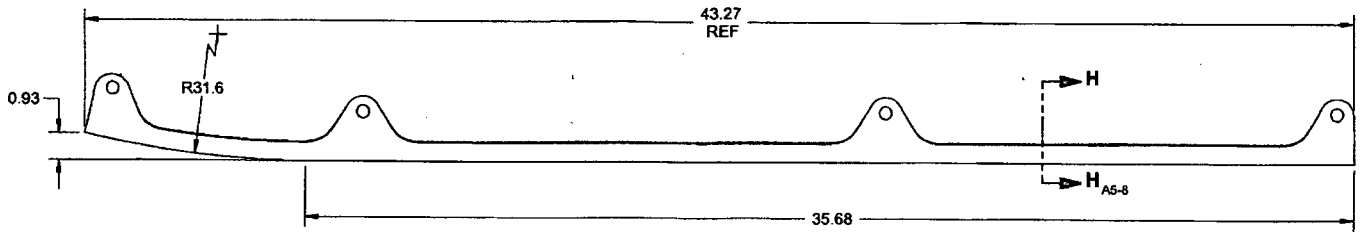

D3805-1 PLATE
(MAKE FROM D3805-1F)

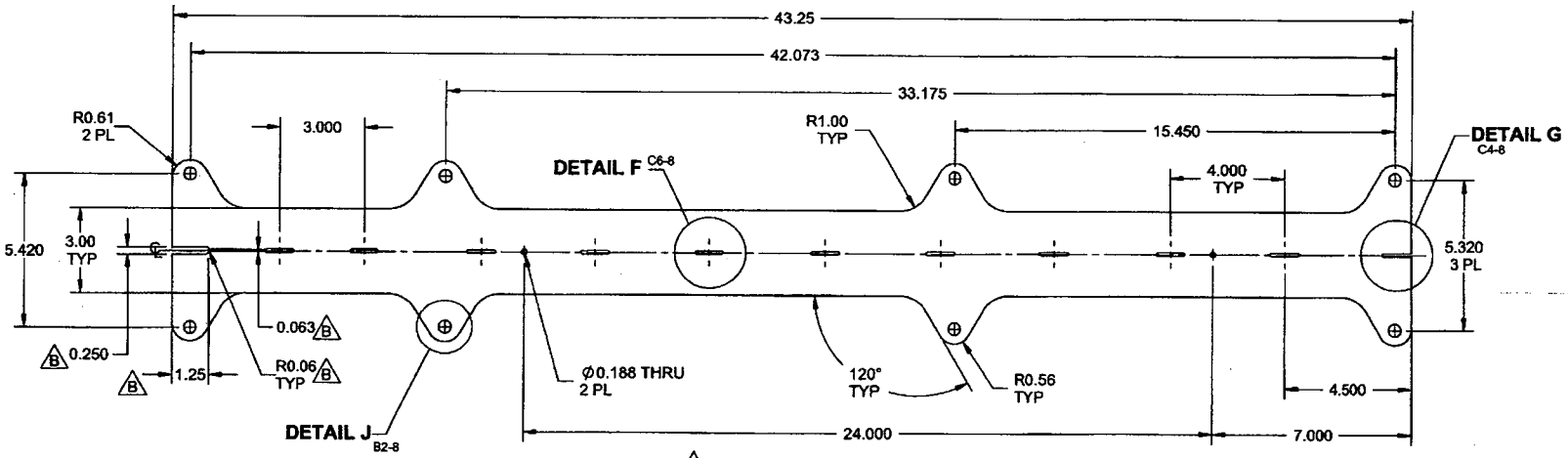

B **D3805-1F PLATE**

RELEASED
2011-10-03

NOTES:
1) MATERIAL: AISI 304/316 STAINLESS STEEL SHEET PER AMS 5513 OR 5524
18 GAUGE (0.050 THICK)
REF. DART SPEC. M304S18GA
2) FINISH: NONE
3) TOLERANCES: PER DART QSI 018 UNLESS OTHERWISE NOTED
4) UNITS: INCHES UNLESS OTHERWISE NOTED
5) BREAK SHARP EDGES: 0.005 TO 0.010 MAX
6) IDENTIFICATION: N/A
7) WEIGHT: 2.11 lbs

DESIGN		DART AEROSPACE USA, INC. KENT, WA
DRAWN		
CHECKED		DRAWING NO. D3805 — REV. B — SHEET 4 OF 8
MFG. APPR.		
APPROVED		TITLE: WEARPLATE ASSY — SCALE: NTS
DE APPR.		
DATE	11.09.16	

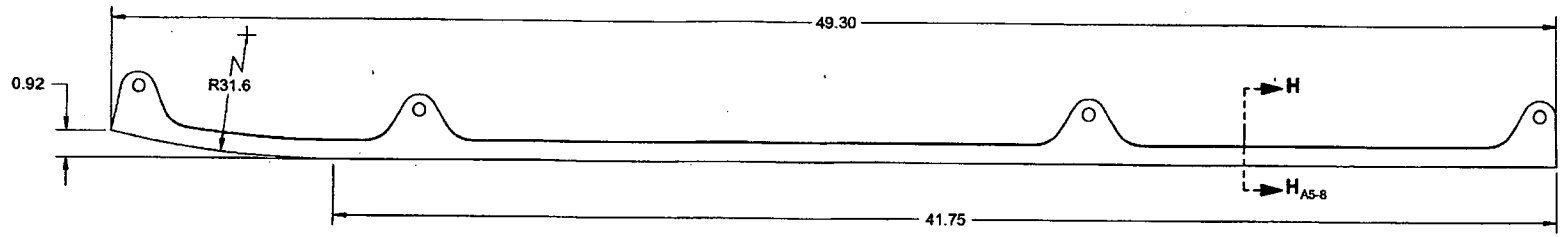

D3805-3 PLATE
(MAKE FROM D3805-3F)

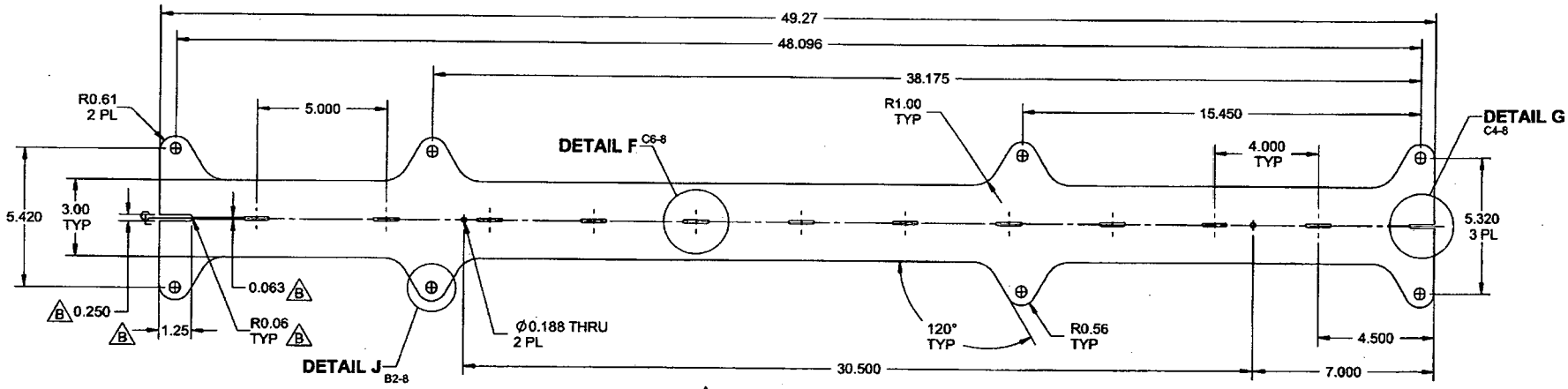

B **D3805-3F PLATE**

RELEASED
2011-10-03

NOTES:
1) MATERIAL: AISI 304/316 STAINLESS STEEL SHEET PER AMS 5513 OR 5524
18 GAUGE (0.050 THICK)
REF. DART SPEC. M304S18GA
2) FINISH: NONE
3) TOLERANCES: PER DART QSI 018 UNLESS OTHERWISE NOTED
4) UNITS: INCHES UNLESS OTHERWISE NOTED
5) BREAK SHARP EDGES: 0.005 TO 0.010 MAX
6) IDENTIFICATION: N/A
7) WEIGHT: 2.36 lbs

DESIGN		DART AEROSPACE USA, INC. KENT, WA
DRAWN		
CHECKED		DRAWING NO. D3805 — REV. B — SHEET 5 OF 8
MFG. APPR.		
APPROVED		TITLE: WEARPLATE ASSY — SCALE: NTS
DE APPR.		
DATE	11.09.16	

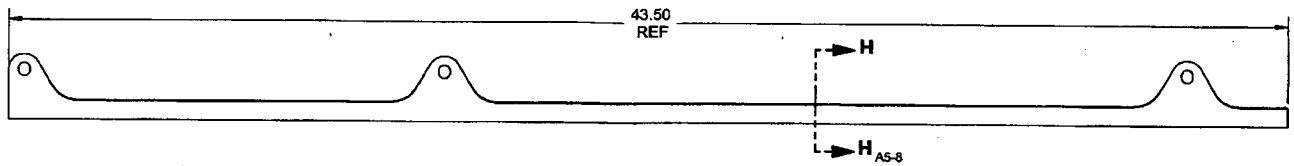

D3805-5 PLATE
(MAKE FROM D3805-5F)

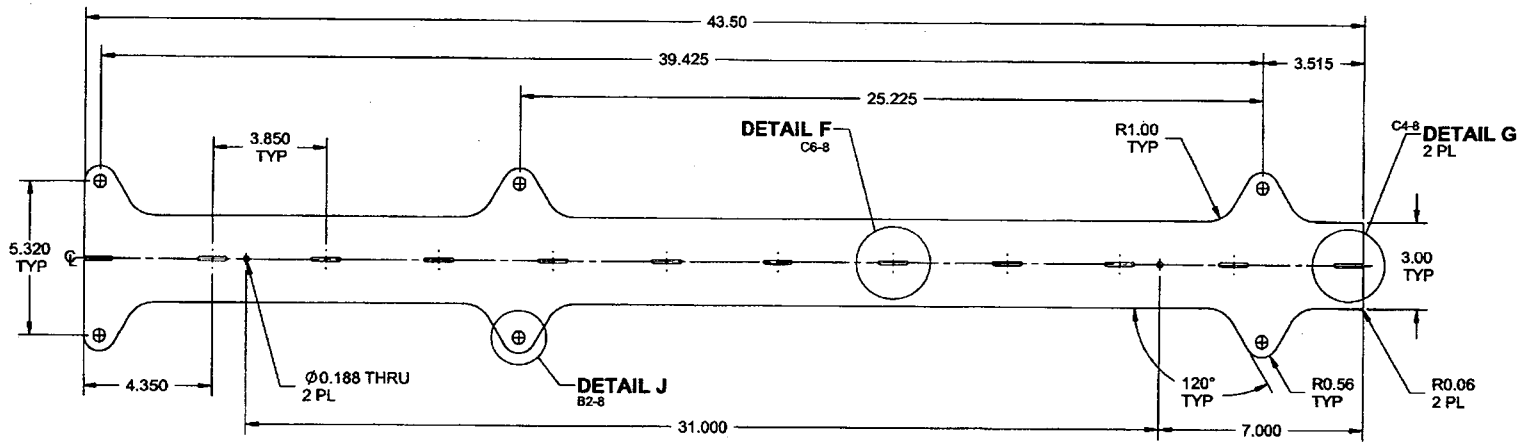

D3805-5F PLATE

RELEASED
2011-10-03

NOTES:
1) MATERIAL: AISI 304/316 STAINLESS STEEL SHEET PER AMS 5513 OR 5524
18 GAUGE (0.050 THICK)
REF. DART SPEC. M304S18GA
2) FINISH: NONE
3) TOLERANCES: PER DART QSI 018 UNLESS OTHERWISE NOTED
4) UNITS: INCHES UNLESS OTHERWISE NOTED
5) BREAK SHARP EDGES: 0.005 TO 0.010 MAX
6) IDENTIFICATION: N/A
7) WEIGHT: 2.06 lbs

DESIGN		DART AEROSPACE USA, INC. KENT, WA
DRAWN		
CHECKED		DRAWING NO. D3805 — REV. B — SHEET 6 OF 8
MFG. APPR.		
APPROVED		TITLE: WEARPLATE ASSY — SCALE: NTS
DE APPR.		
DATE	11.09.16	

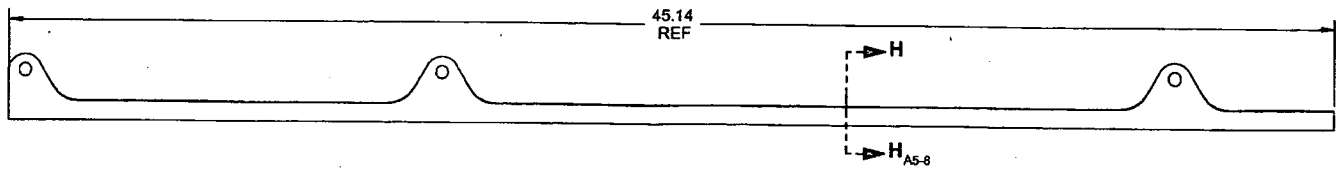

D3805-7 PLATE
(MAKE FROM D3805-7F)

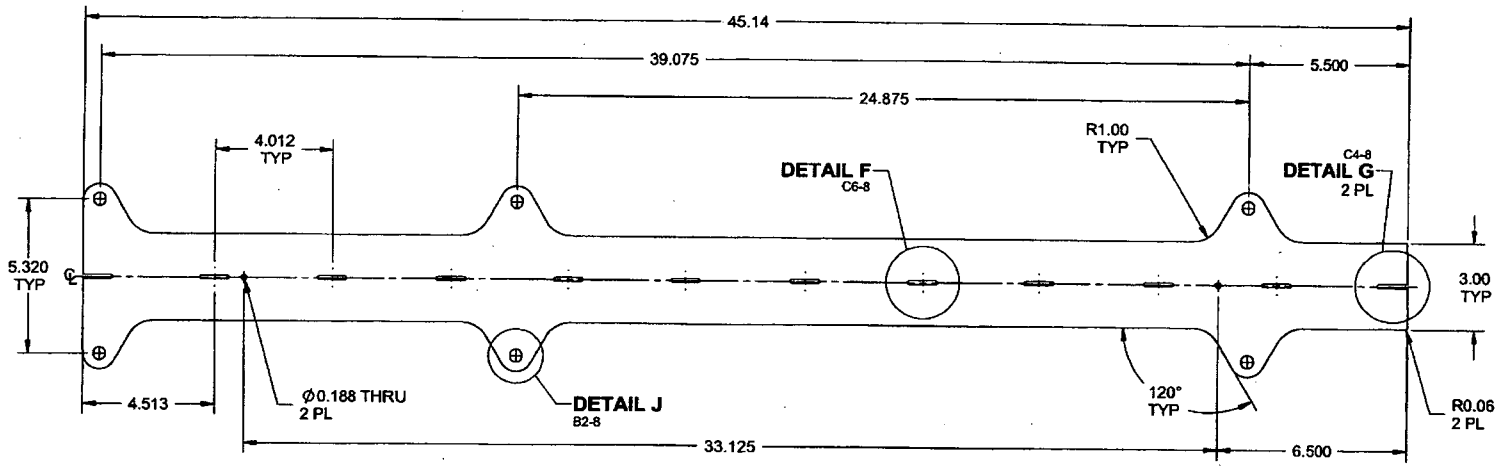

D3805-7F PLATE

RELEASED
2011-10-03

NOTES:
1) MATERIAL: AISI 304/316 STAINLESS STEEL SHEET PER AMS 5513 OR 5524
18 GAUGE (0.050 THICK)
REF. DART SPEC. M304S18GA
2) FINISH: NONE
3) TOLERANCES: PER DART QSI 018 UNLESS OTHERWISE NOTED
4) UNITS: INCHES UNLESS OTHERWISE NOTED
5) BREAK SHARP EDGES: 0.005 TO 0.010 MAX
6) IDENTIFICATION: N/A
7) WEIGHT: 2.13 lbs

DESIGN		DART AEROSPACE USA, INC. KENT, WA
DRAWN		
CHECKED		DRAWING NO. D3805 — REV. B — SHEET 7 OF 8
MFG. APPR.		
APPROVED		TITLE: WEARPLATE ASSY — SCALE: NTS
DE APPR.		
DATE	11.09.16	

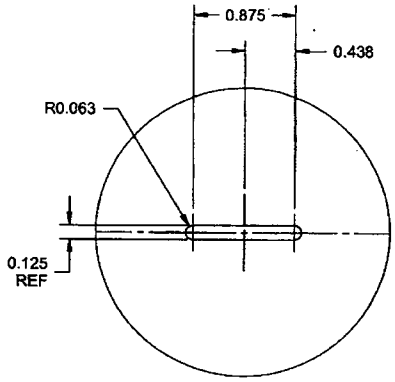

DETAIL F C5-4 C5-5 C4-6 C4-7
SLOT DETAIL TYP
SCALE 4X

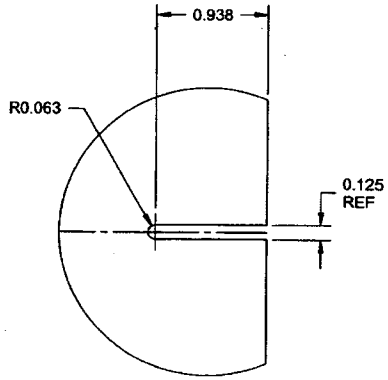

DETAIL G C1-4 C1-5 C1-6 C2-7
SLOT DETAIL TYP
SCALE 4X

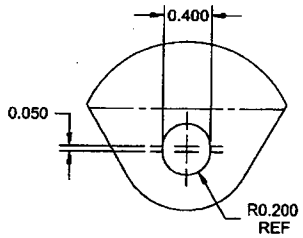

DETAIL J B6-4 B7-5 B5-6 B5-7
SCALE 4X

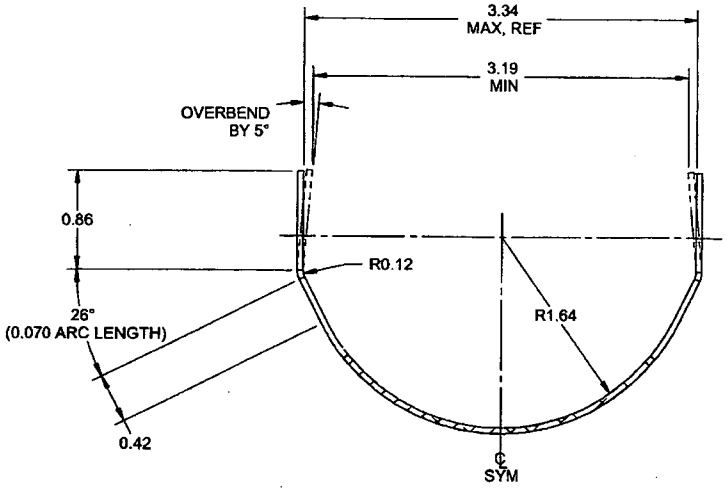

SECTION H-H D3-4 D3-5 D3-6 D3-7
SCALE 4X

RELEASED
2011-10-03

DESIGN		DART AEROSPACE USA, INC. KENT, WA
DRAWN		
CHECKED		DRAWING NO. D3805 — REV. B — SHEET 8 OF 8
MFG. APPR.		
APPROVED		TITLE WEARPLATE ASSY — SCALE NTS
DE APPR.		
DATE 11.09.16		